LZ3LP42K

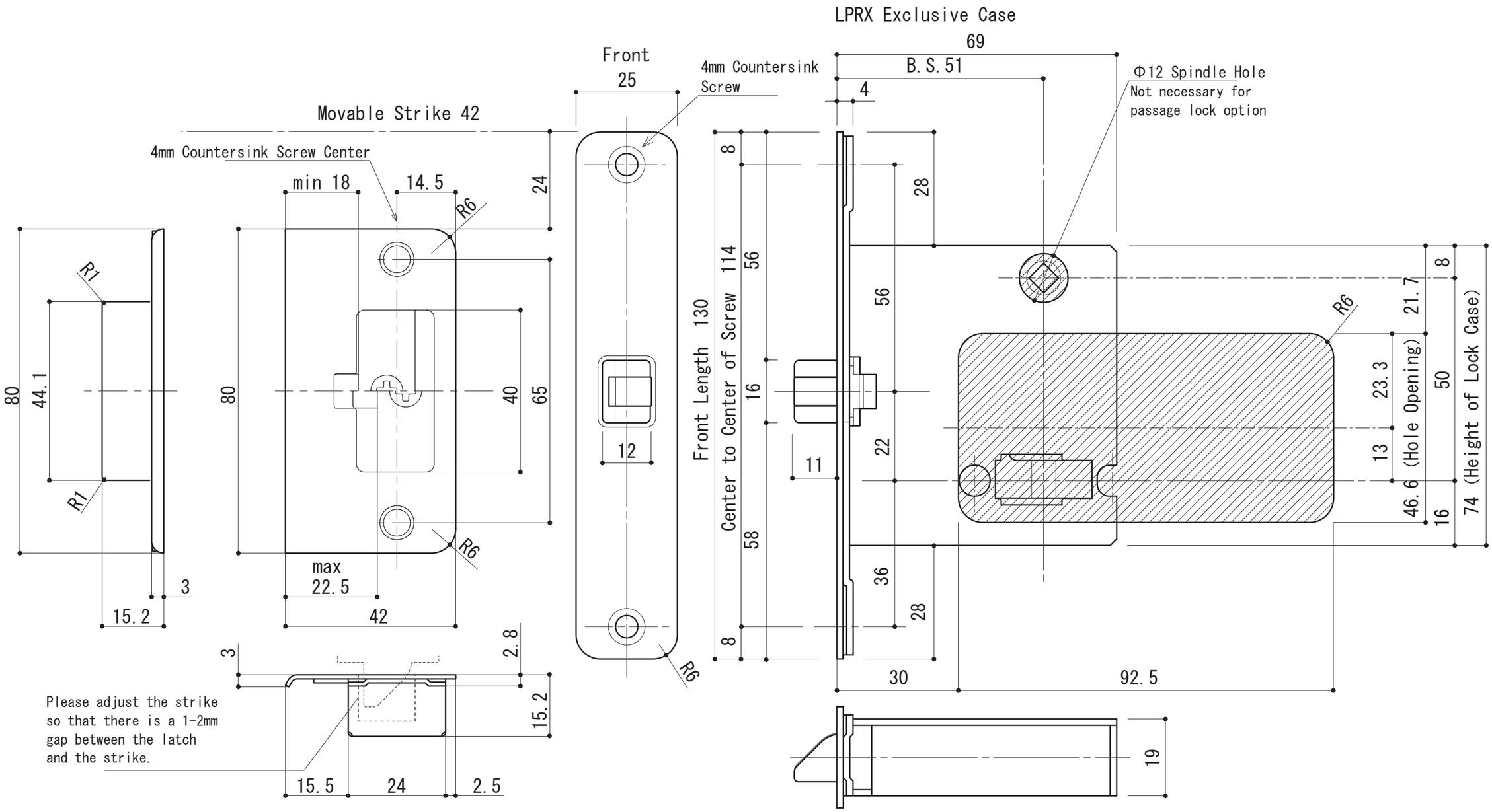

Hole Opening

Please open only the necessary holes according to lock set type following the dimensions above.
Not complying might result in incorrect operation of the lock set and or lock case.