Sanitary Accessory Installation Instruction Sheet

# SH-017-3 (Towel Bar Handle)

## Safety Warning

* Please be sure to read "Safety Warning" before installation to ensure product will be installed properly.
* Customers who have purchased this product from the online shop should read the attached "Disclaimers and Warranties" and "Precautions" before installation.
* Do not dispose the installation sheet after installation, instead please pass it to the product user.
* Pass all tools that have been provided to product user.

■ The following displays shows the levels of harm or damage if product is not installed properly.

| | |
|---|---|
| ⚠Warning This display warns the possibility of death or serious injury. | ⚠Caution This display warns the possibility of injury or possibility of physical damage. |

■ The following symbols shows the precautions that needs to be observed.

| | |
|---|---|
| This symbol is used to identify prohibited actions that must not be carried out. | This symbol is used to identify mandatory actions that must be carried out. |

### ⚠Warning About installation

* Do not install this product on glass doors that are thicker or wider than what is stated.

After installation, please check to ensure product has been installed properly.
If product has not been installed properly, it may wobble and drop off, resulting in injuries.

### ⚠Warning About product usage

Do not use product for unintended purpose or application. Product failure may result in injury.

Do not load heavier than the stated load capacity. Product failure may result in injury.

Do not apply excessive force onto product. Product failure may occur and lead to injury.

### ⚠Caution About product maintenance

Wipe away any stain of cosmetic or chemical product when found. Leaving stains on product may lead to discolouration, corrosion and/or deterioration and result in breakage and injury.

Wipe with a soft, damp cloth. When necessary, wipe a damp cloth with mild detergent and finish with a soft, dry cloth. Do not use gasoline (Benzene), thinner, alcohol, or acidic/alkaline based detergent and/or cleanser to clean the product.

## Product Specification

| | |
|---|---|
| Type | Towel Bar Handle |
| Product Code | SH-017-3 |
| Material | Brass |
| Product Dimension | 510 x 101 x 103mm |
| Load Capacity | 588N (60kgf) |
| Glass Thickness | 8~12mm |
| Hole Dimension | Ø16 (2 places) |

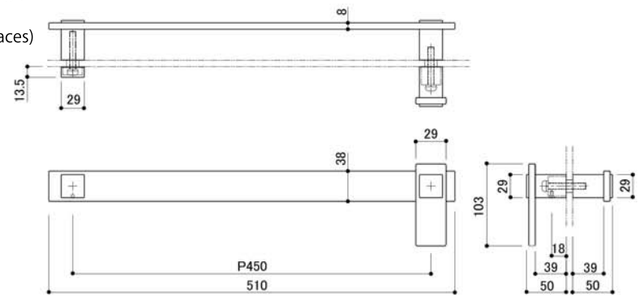


## Package Contents

## Installation Procedure

◎ Installation Procedure

Disassembling Main Body

1. Unscrew Knob Fixing Screw to remove Knob and Knob Pedestal.
2. Unscrew Cap Fixing Screw by using the provided Allen Key to remove Cap and Cap Pedestal.

Installing Towel Bar Handle onto glass door

3. Insert Rubber Tubes into glass holes.
4. Fix Main Body onto glass door with Knob Pedestal, Cap Pedestal using the provided Spring Washers and IIstallation Screws.
5. Fox Knob to Knob Pedestal with Knob Fixing Screw.
6. Use the provided Allen Key to screw Cap Fixing Screw and secure Cap to Cap Pedestal.
   * Do make sure Cap is installed properly to Cap Pedestal as shown in the illustration below.
7. Check product after installation to ensure it has been installed properly.

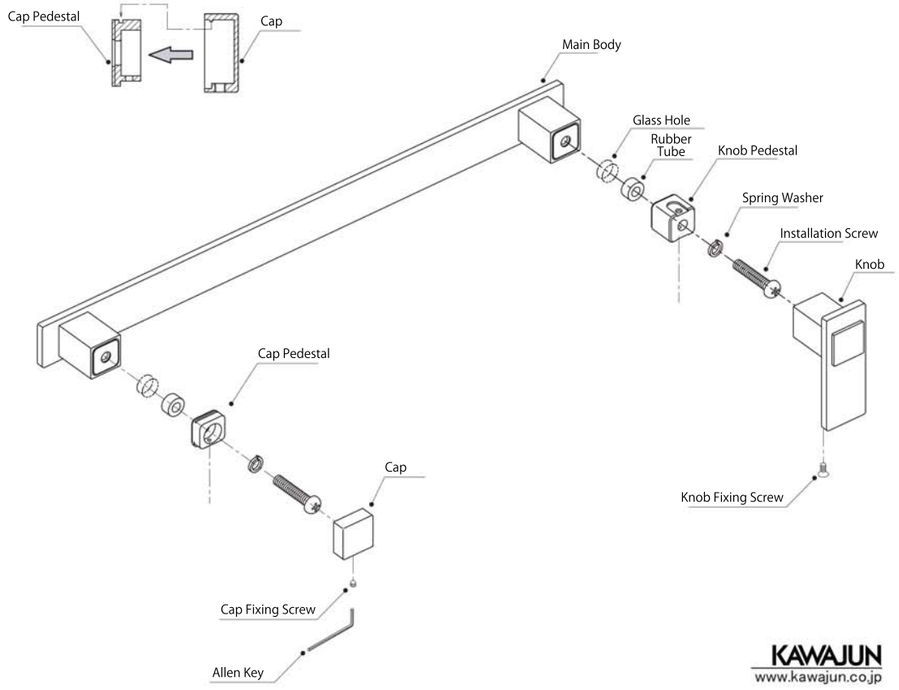


KAWAJUN
www.kawajun.co.jp

NO.001